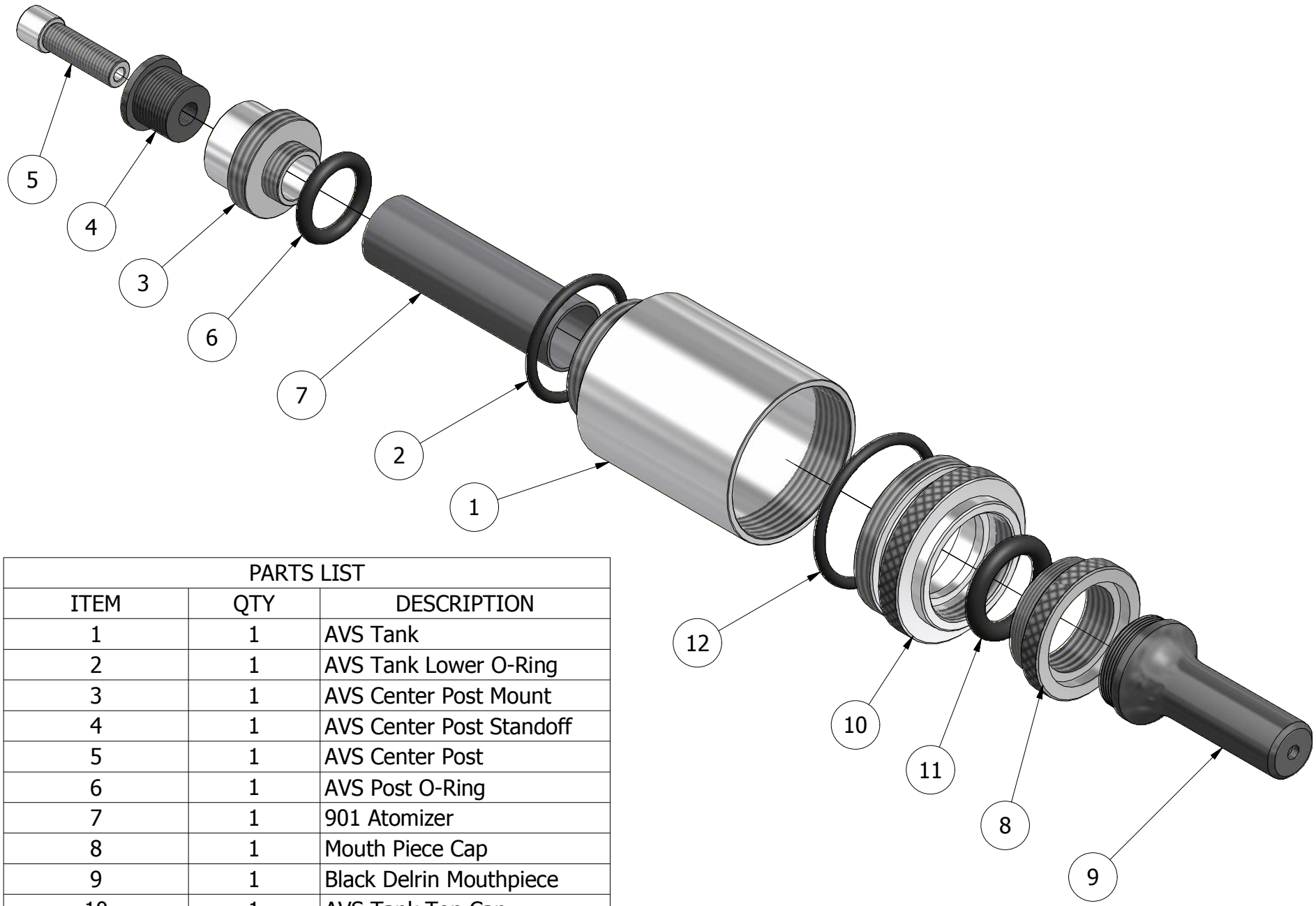

PARTS LIST		
ITEM	QTY	DESCRIPTION
1	1	AVS Tank
2	1	AVS Tank Lower O-Ring
3	1	AVS Center Post Mount
4	1	AVS Center Post Standoff
5	1	AVS Center Post
6	1	AVS Post O-Ring
7	1	901 Atomizer
8	1	Mouth Piece Cap
9	1	Black Delrin Mouthpiece
10	1	AVS Tank Top Cap
11	1	Upper Atomiser O-Ring
12	1	AVS Tank Cap O-Ring